GLOWI GLASS BOARD

springboard working surfaces

ARCHYI.

INSTRUCTIONS • INSTRUCTIES • ISTRUZIONI • ANLEITUNG • INSTRUCCIONES • INSTRUÇÕES

x2

≤1200x900mm

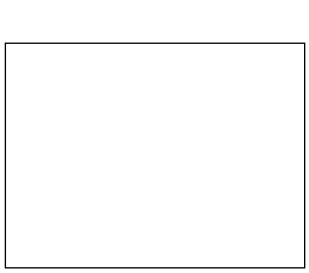

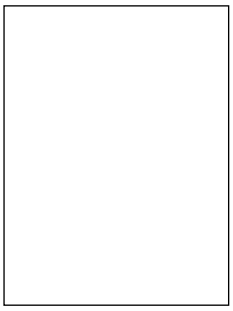

1

1x**A.**

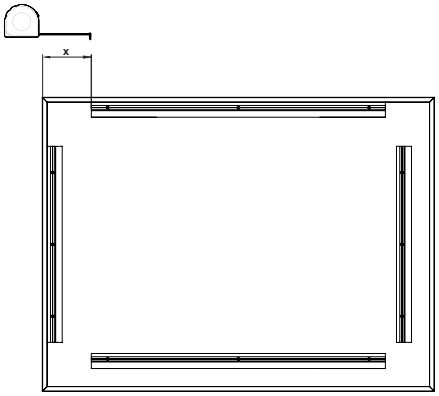

2

4x**B.**

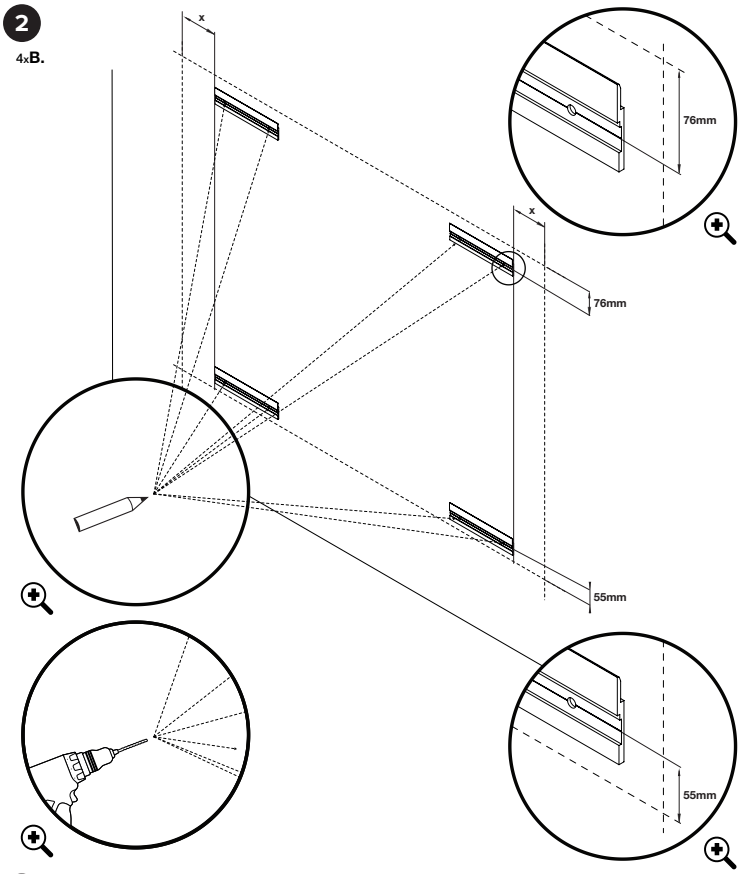

3

8x**D.**
8x**E.**

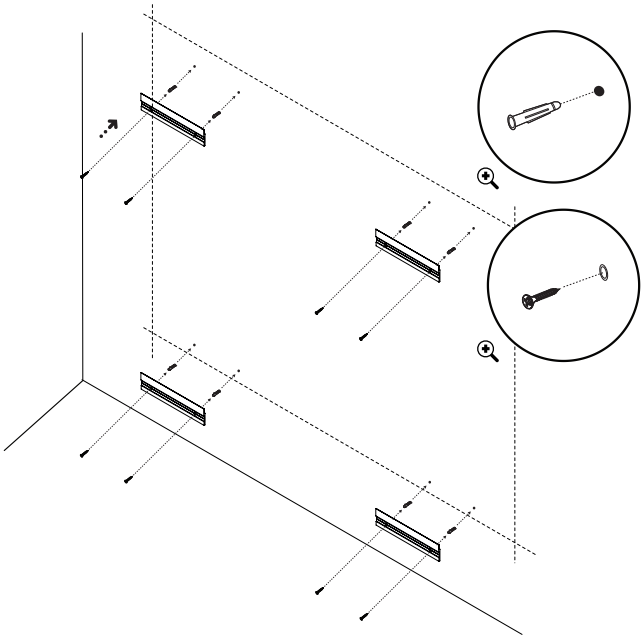

4

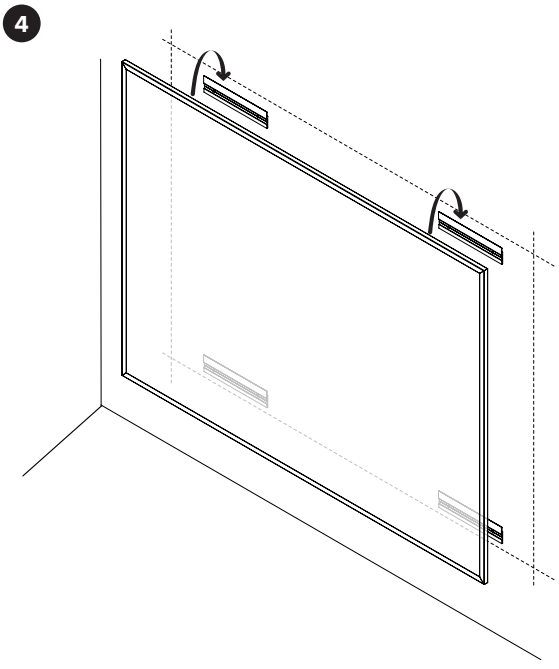

5

1x**C.**

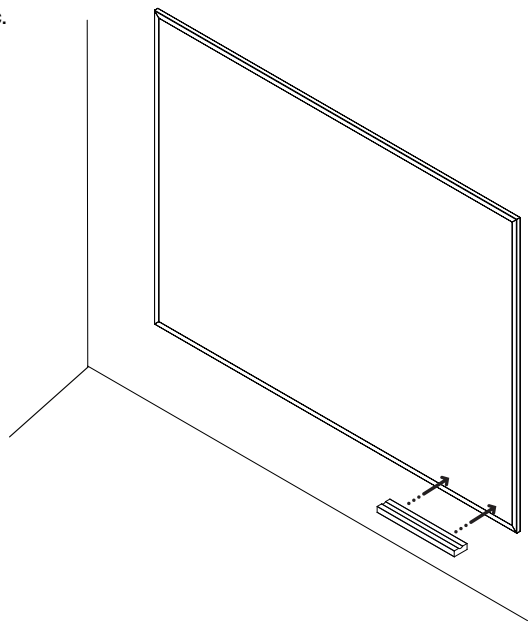

1

1x**A.**

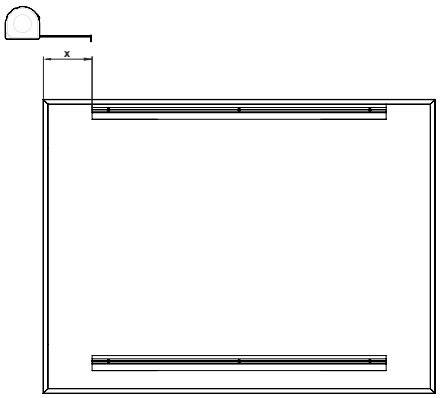

2

4x**B.**

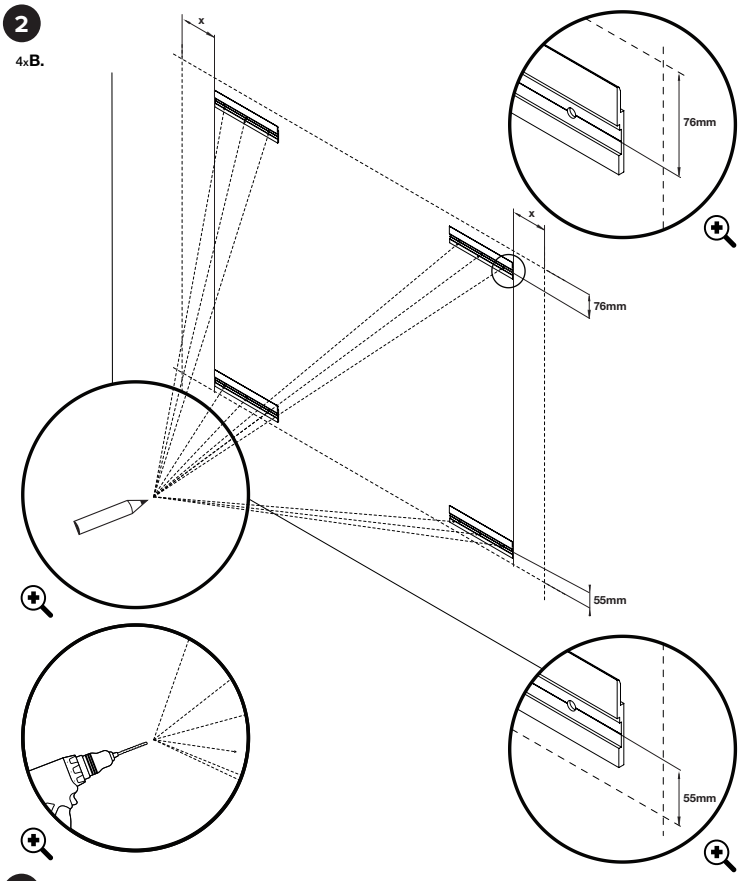

3

12x**D.**
12x**E.**

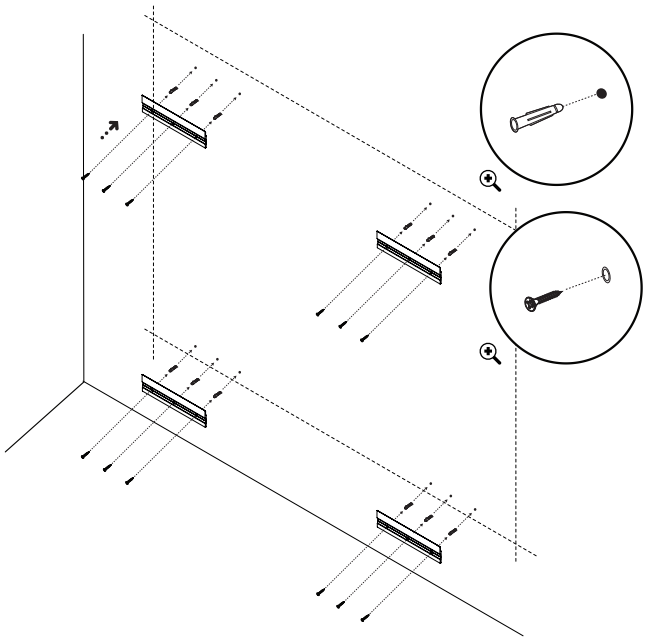

4

1x**C.**

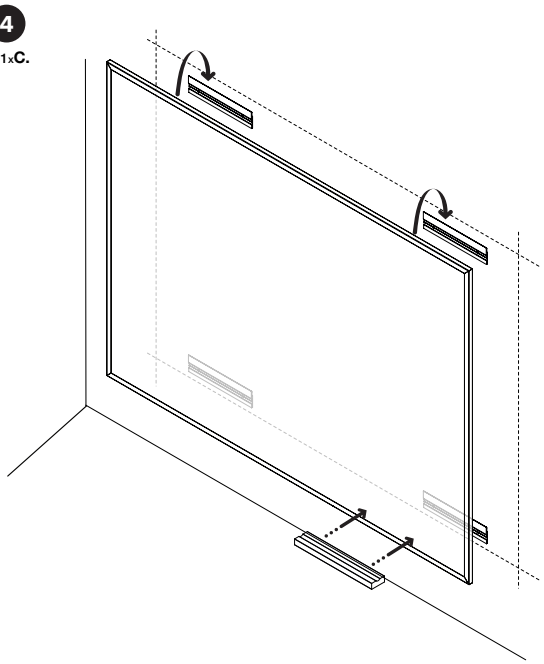

A.1x

B.4x

C.1x

D.8x

E.8x

D.12x

E.12x